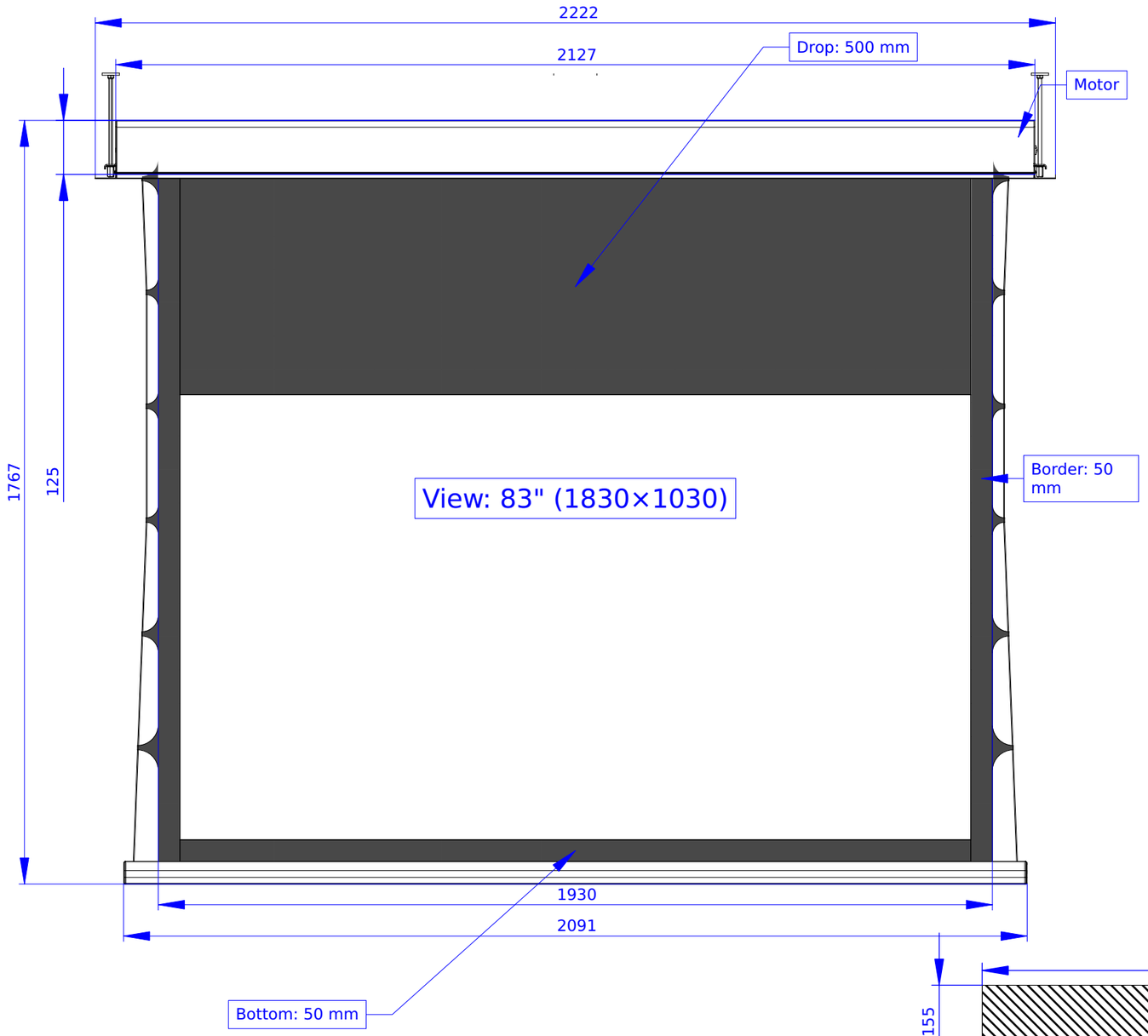

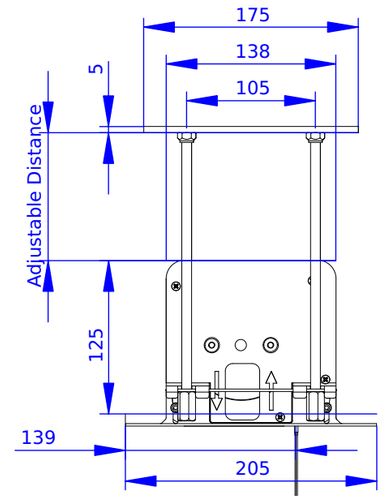

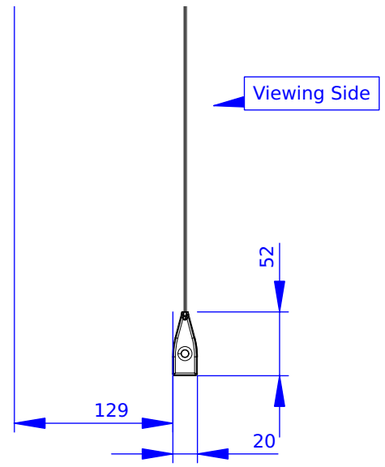

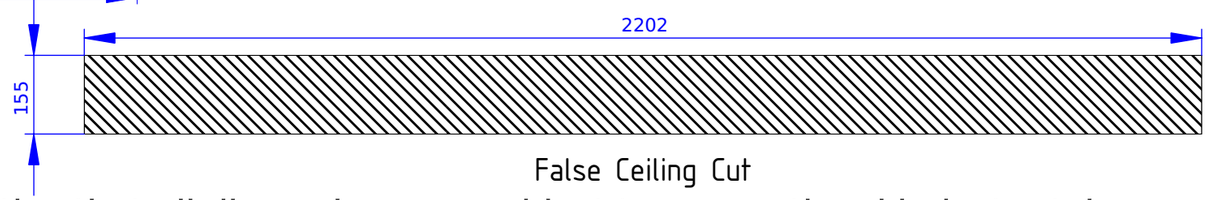

All measurements are in mm.

Please notice that all dimensions are subject to conventional industry tolerances.

Product code: **114WW183103HV5505BBFD25R**

Packaging size **0** Weight: **18 kg**

Date: **17/04/2025** Series: **Motorized**

SCREENLINE
the screen makes the difference