The information contained in this drawing is the sole property of B-Tech AV Mounts Corporation Limited, any reproduction in part or whole without the written permission of B-Tech AV Mounts Corporation Limited is prohibited.

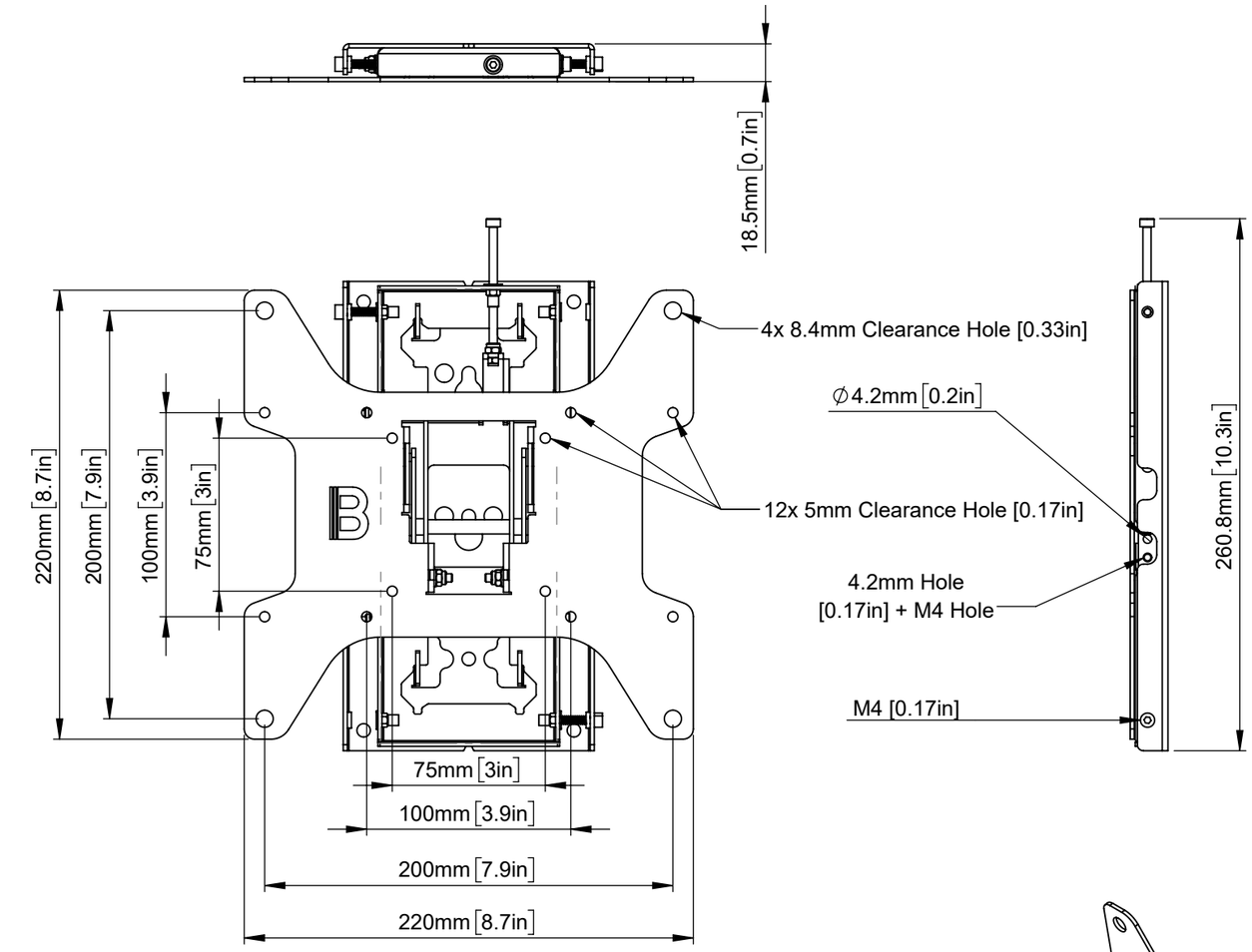

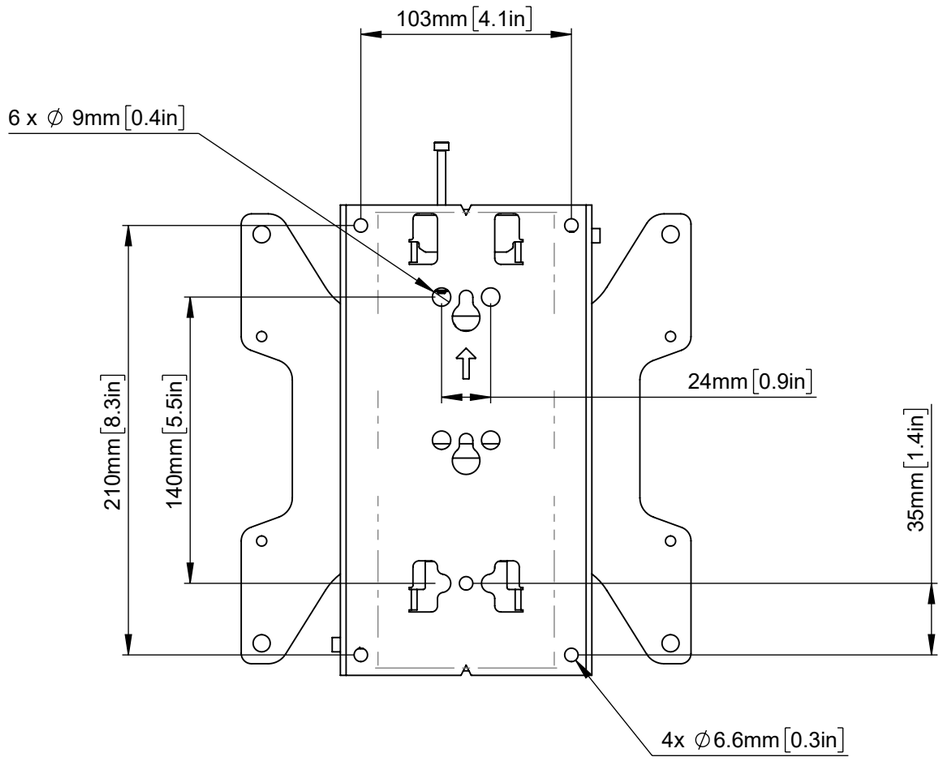

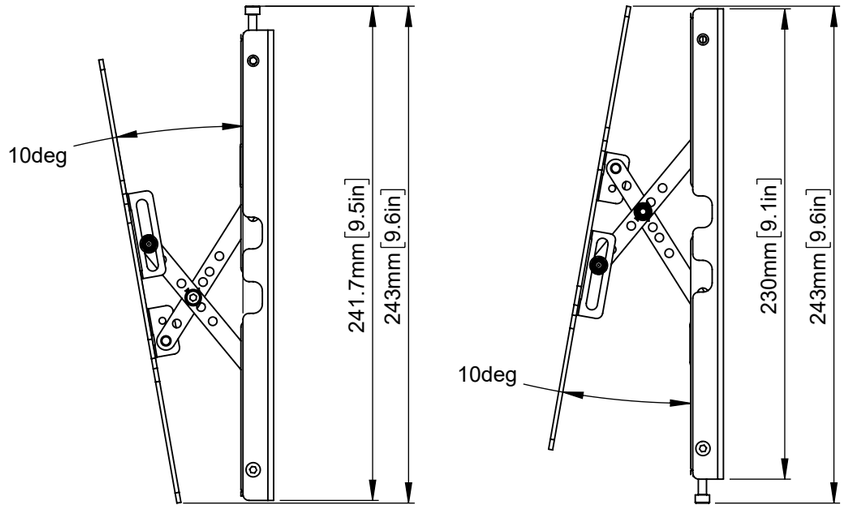

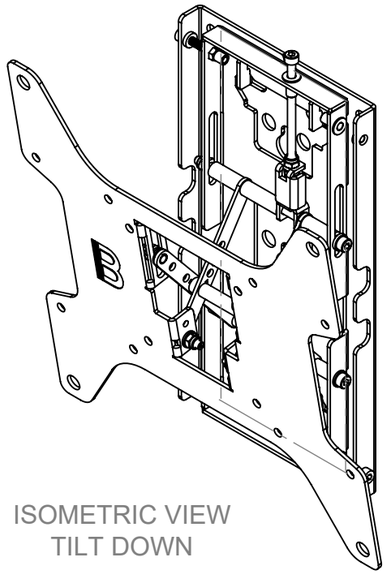

ISOMETRIC VIEW
TILT DOWN

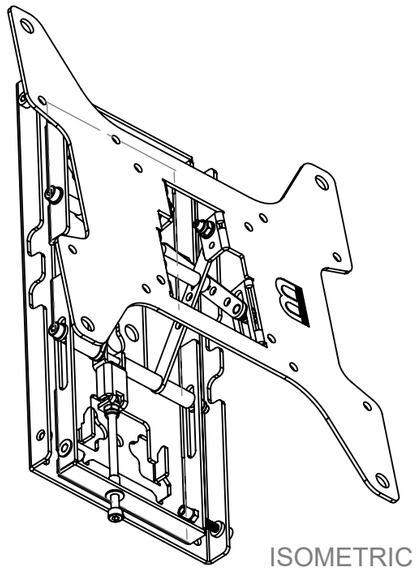

ISOMETRIC VIEW
TILT UP

B-Tech AV Mounts Corporation Limited makes no representation or warranties, express or implied, with respect to the reuse of the data provided herewith, regardless of its format or the means of its transmission. B-Tech AV Mounts Corporation Limited makes every effort to provide accurate information, however there is no guarantee or representation to the user as to the accuracy, currency, suitability or reliability of this data. The user assumes all risks associated with its use. B-Tech AV Mounts Corporation Limited assumes no responsibility for actual or consequential damage incurred as a result of any user's reliance on this data.

B-Tech AV Mounts Corporation Limited				**B-Tech No:**	BT7611
				Title:	Wall Mount with Tilt for ePaper Displays
B Tech AV Mounts	UNLESS OTHERWISE SPECIFIED DIMENSIONS ARE IN MILLIMETERS	**Size:**	A3	**Revision:**	R00
		Scale:	1:3	**Date:**	03/09/2025
		Sheet:	1 of 1	**File Name:**	BTD-BT7611